SCRUBBER-DRIER FREE EVO 50BT

Content filters: validity 18/09/2017

18/09/2017

8.527.0011 - SCRUBBER-DRIER FREE EVO 50BT....3
R85270011 - SCL FREE EVO 50BT -GR.CH./GR.SC.- LWS....4
R55092079 - GRUPPO SQUEGEE PRESSOFUSIONE....6
R55111795 - ASSIEME SQUEGEE UOMO A TERRA....8
R55092084 - GRUPPO COMPONENTI SERBATOI FREE EVO BT....10
R55111474 - ASSIEME RUOTA PIVOTANTE FREE/SWIFT....13
R55111793 - ASSIEME MOTO-DIFFERENZIALE COMMERCIALE FREE C/TRAZ....15
R55111834 - ASSIEME COMANDO ACQUA FREE EVO B/BT....17
R55092140 - GRUPPO PIATTO SPAZZOLA FREE EVO 50B-BT PIATTO MAGGIORATO C/ELETTROV....19
R55110986 - SCATOLA ELETTRICA CABLATA BT....21
R55111097 - ASSIEME SPAZZOLA PPL MOD 50 -M102-L102 D 483/19 DX/SX....23
Components index....25

Pos.	Code	Description
0	R85270011	SCL FREE EVO 50BT -GR.CH./GR.SC.- LWS

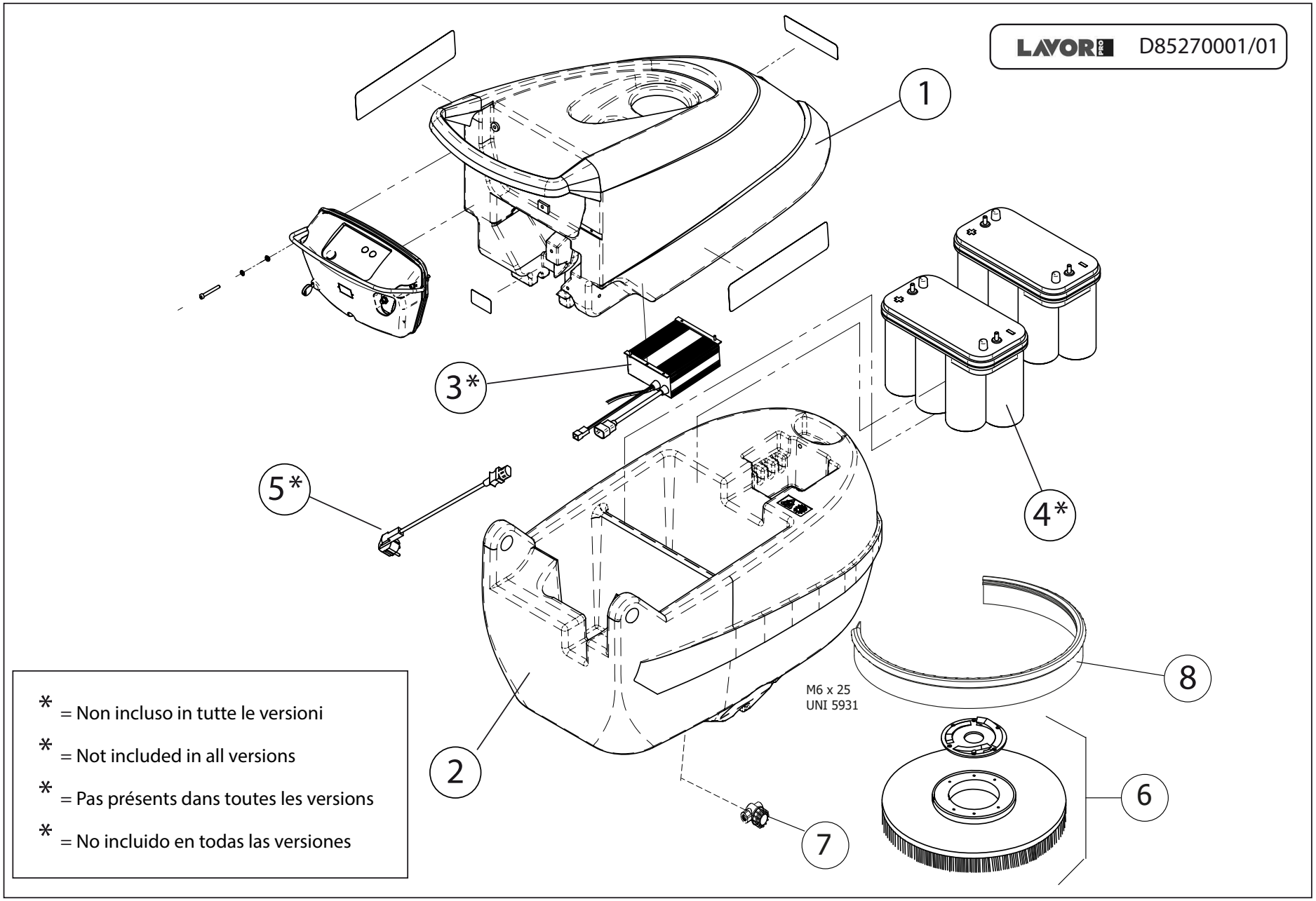
D85270001/01
1
3*
5*
4*
2
M6 x 25
UNI 5931
8
6
7
* = Non incluso in tutte le versioni
* = Not included in all versions
* = Pas présents dans toutes les versions
* = No incluido en todas las versiones

Pos.	Code	Substituted by	Q.ty	Purchasable	Min. Q.ty	Price €	For mainten.	Description
0	R55092079		1	No				GRUPPO SQUEGEE PRESSOFUSIONE
0	R55092084		1	No				GRUPPO COMPONENTI SERBATOI FREE EVO BT
0	R55092140		1	No				GRUPPO PIATTO SPAZZOLA FREE EVO 50B-BT PIATTO MAGGIORATO C/ELETTROV.
0	R55110986		1	No				SCATOLA ELETTRICA CABLATA BT
0	R55111097		1	No				ASSIEME SPAZZOLA PPL MOD 50 -M102-L102 D 483/19 DX/SX
001	4.508.0780	5.511.1336	1	Yes	1	434.91		RECOVERY TANK - LIGHT GREY
002	4.508.0477		1	Yes	1	435.33		SOLUTION TANK SWIFT B - GREY
005	4.508.1554		1	Yes	1	39	EXT	BUMPER FREE EVO
006	5.511.1097		1	Yes	1	71.65	ORD	PPL BRUSH 480 MM. W/UNIFIED COUPLING FLANGE
007	3.102.0026		1	Yes	1	37.84	ORD	WATER FILTER WITHOUT FLOW REGULATOR
008	4.508.1554		1	Yes	1	39	EXT	BUMPER FREE EVO

D55090031/01

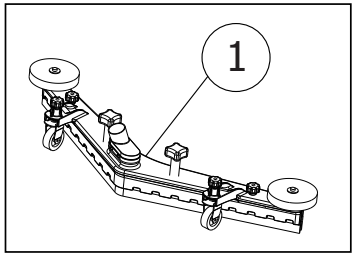

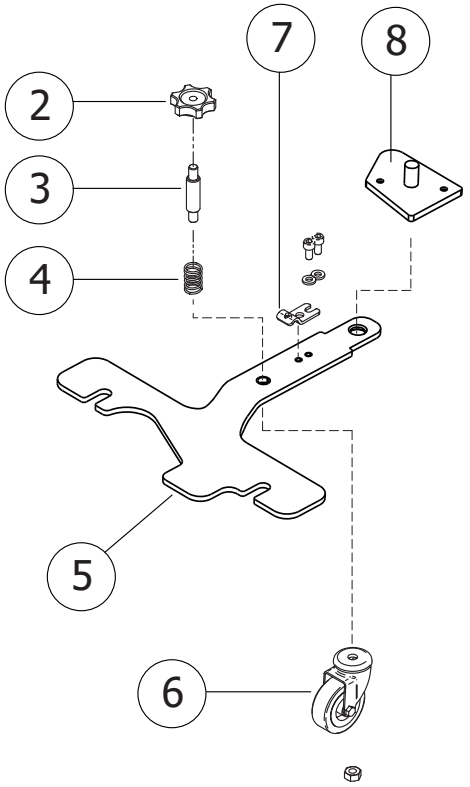

Pos.	Code	Substituted by	Q.ty	Purchasable	Min. Q.ty	Price €	For mainten.	Description
0	R55111795		1	No				ASSIEME SQUEGEE UOMO A TERRA
001	5.511.1795		1	Yes	1	166.41		SQUEEGEE ASSY
002	3.099.1189		1	Yes	5	3.26		KNOB M8 H26
003	4.507.1385		1	Yes	3	5.71		ADJUSTING PIN
004	4.507.1076		1	Yes	12	1.28		SPRING
005	4.507.1478		1	Yes	1	38.66		SQUEGEE SUPPORT
006	3.006.0076		1	Yes	2	11.83	EXT	SQUEEGEE WHEEL (D.50)
007	4.507.0854		1	Yes	5	3.21		BRACKET FOR SQUEEGE LIFT CABLE
008	5.513.0299		1	Yes	1	23.77		SQUEGEE SUPPORT PIN

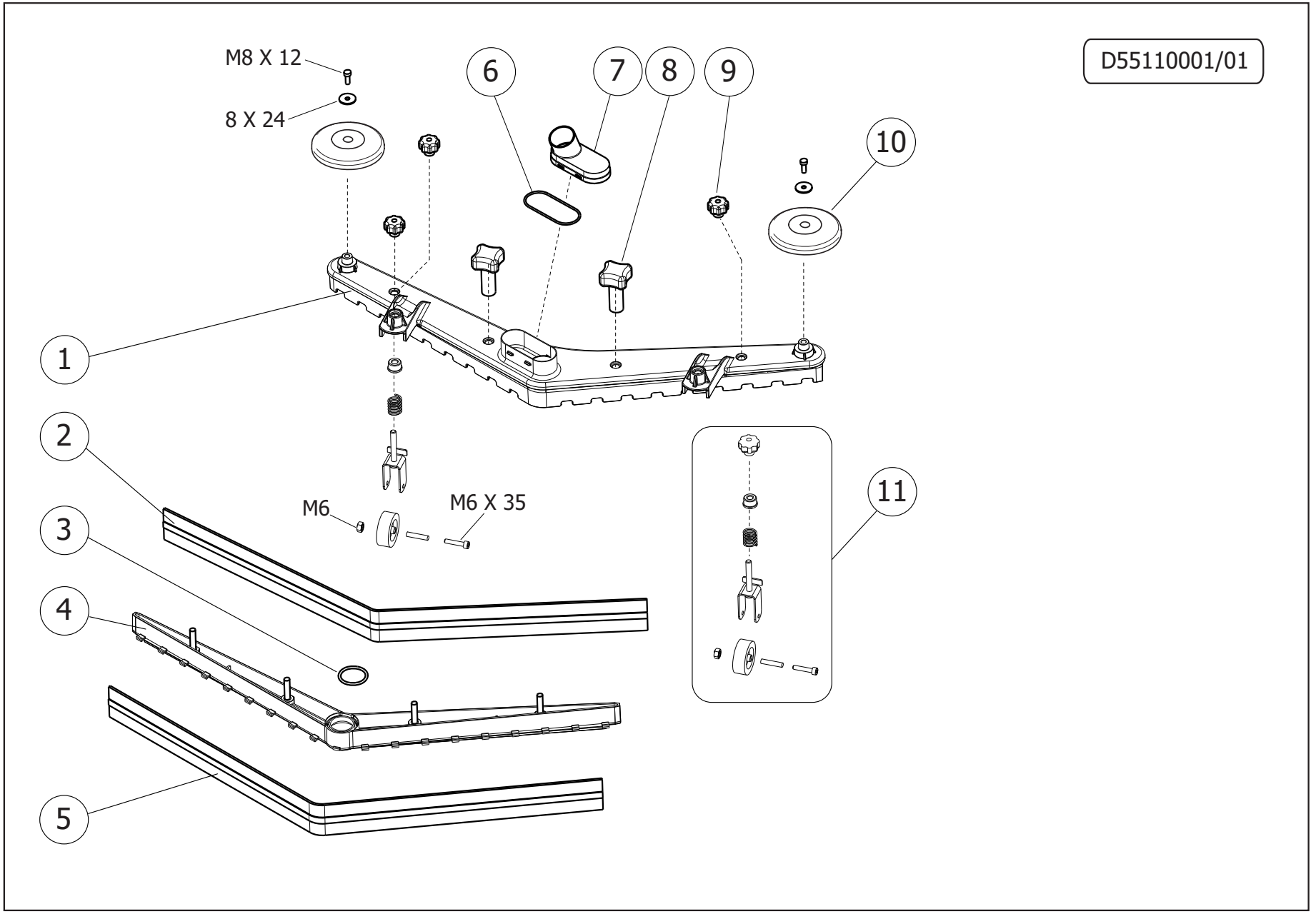
D55110001/01
M8 X 12
8 X 24
6
7
8
9
10
1
2
3
4
5
M6
M6 X 35
11

Pos.	Code	Substituted by	Q.ty	Purchasable	Min. Q.ty	Price €	For mainten.	Description
001	4.505.0866		1	Yes	1	87.36		SQUEEGEE L=780 MM SANDBLAST AND CATAPHORESIS TREATMENT
002	4.508.X468		1	Yes	2	7.31	ORD	FRONT SQUEEGEE BLADE L.830 TH.2,5
003	3.200.0168		1	Yes	12	1.28		O-RING 4143
004	4.508.0505		1	Yes	1	33.63		SQUEEGEE BLADES HOLDER
005	4.508.X467		1	Yes	2	8.39	ORD	REAR SQUEEGEE BLADE L.870 TH.3
006	3.200.0172		1	Yes	12	1.28		O-RING 3275
007	4.508.1552	6.505.0056	1	Yes	3	7.25		SQUEEGEE SUCTION COMPARTMENTCOVER
008	3.099.1900		2	Yes	3	5		VOLANTINO LOBI PROLUNGATO D.52 M8x23
009	3.099.0467		2	Yes	2	11.83		KNOB M8
010	4.508.0224		2	Yes	2	12.41	EXT	BUMPER WHEEL D.110 GREY
011	5.511.1823		1	Yes	1	31.47	EXT	SQUEEGEE WHEEL ASSEMBLY

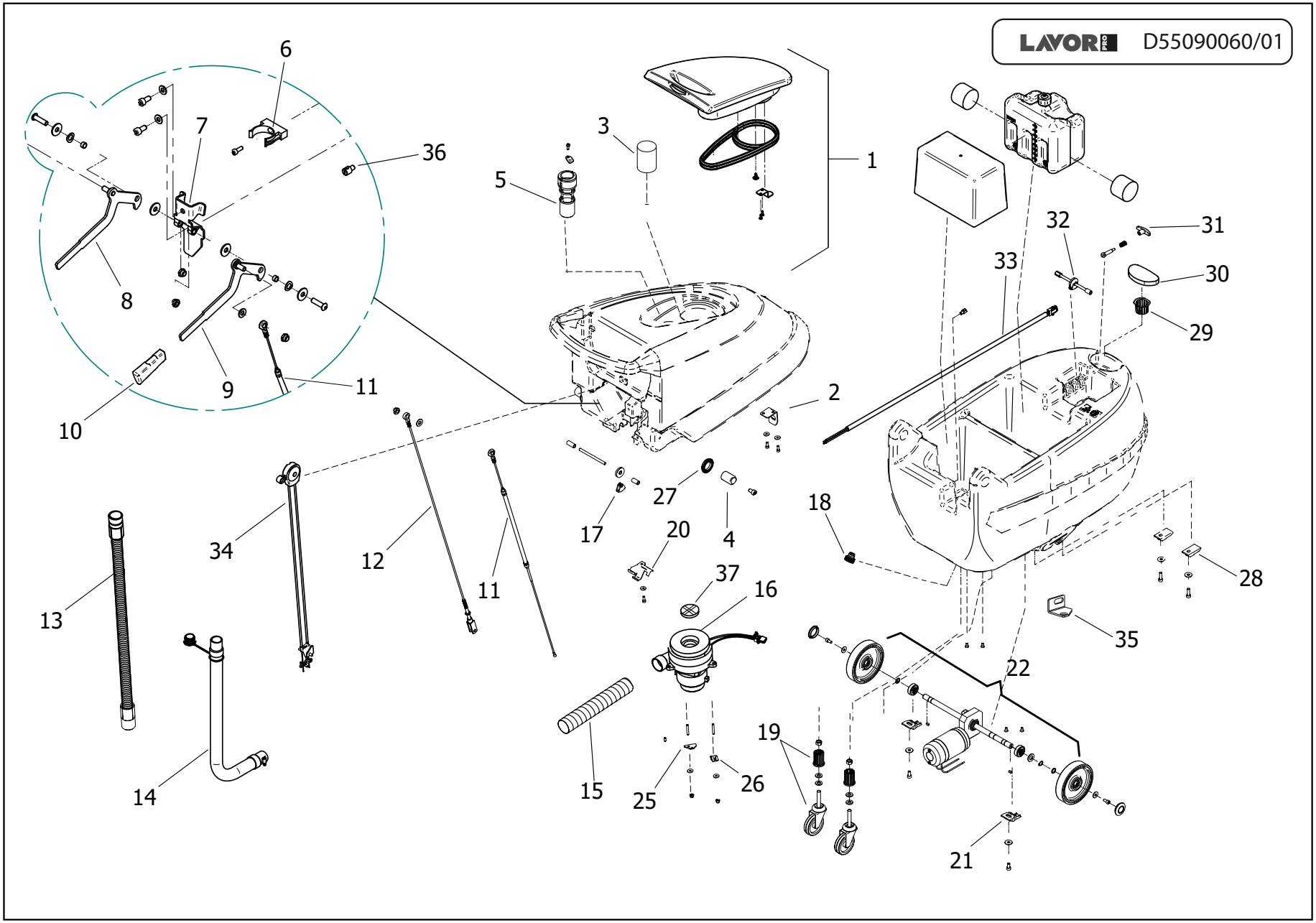
LAVOR PRO
D55090060/01
1
2
3
4
5
6
7
8
9
10
11
12
13
14
15
16
17
18
19
20
21
22
25
26
27
28
29
30
31
32
33
34
35
36
37

Pos.	Code	Substituted by	Q.ty	Purchasable	Min. Q.ty	Price €	For mainten.	Description
0	R55111474		1	No				ASSIEME RUOTA PIVOTANTE FREE/SWIFT
0	R55111793		1	No				ASSIEME MOTO-DIFFERENZIALE COMMERCIALE FREE C/ TRAZ.
0	R55111834		1	No				ASSIEME COMANDO ACQUA FREE EVO B/BT
001	5.511.1657		1	Yes	1	111.73		TANK COVER ASSEMBLY
002	4.507.0700		1	Yes	2	8.21		CLAMP FOR TANK LOCKING
003	4.508.1652		1	Yes	2	7.57		CIRCULAR AIRFOAM GASKET
004	4.508.0738		2	Yes	4	4.89		TUBE FOR TANK ROTATION
005	5.511.1656		1	Yes	1	56.02		FLOAT ASSEMBLY
006	3.099.0343		1	Yes	6	2.5		HOSE HOLDER D. 40
007	5.513.0134		1	Yes	1	24.84		LEVER SUPPORT
008	5.513.0133		1	Yes	1	39.12		BRUSH PLATE LIFTING ASSEMBLY
009	5.513.0132		1	Yes	1	39.12		SQG LIFTING LEVER ASSEMBLY
010	4.508.0971		2	Yes	3	5.15		HANDLE SPECIAL LEVEL (15X4)
011	3.099.1329	5.511.1331	1	Yes	1	47.87	EXT	SQUEGEE LIFT CABLE
012	3.099.0881		1	Yes	1	26.01		CABLE D.2,5x133 L=685
013	5.509.0629		1	Yes	1	45	EXT	SUCTION HOSE ASSEMBLY COMPACT
014	5.511.1655		1	Yes	1	42.13	EXT	EXHAUST PIPE ASSEMBLY
016	5.511.1865		1	Yes	1	150		SUCTION MOTOR ASSEMBLY
018	5.511.0937		1	Yes	1	23.11	EXT	TANK DRAIN CAP ASSY
019	5.511.1474		2	Yes	1	70.11		REINFORCED WHEEL
020	4.507.0699		1	Yes	1	23.66		PROTECTION FOR CABLE
021	4.508.0689		2	Yes	12	1.29		FIXING WHEEL AXLE - SWIFT B
022	5.511.1793		1	Yes	1	590		ASSIEME MOTO-DIFFERENZIALE COMMERCIALE FREE C/ TRAZ.
025	4.507.1159		1	Yes	3	5.25		REVERSE ROTATION PLATE FOR SUCTION MOTOR
026	4.505.0160		1	Yes	3	5.81		BRACKET FOR LAMB SUCTION MOTOR
027	4.508.0803		2	Yes	6	2.63		SPACER
028	4.507.0793		2	Yes	12	1.28		LEVER SUPPORT PLATE - SWIFT B
029	4.508.1064		1	Yes	12	1.29	ORD	DETERGENT TANK FILTER FOR SWIFT/FLICK
030	4.508.0739		1	Yes	2	12.41		SPONGE FILTER
031	3.099.0307		1	Yes	6	2.55		HANDLE FOR TIE ROD BLACK MODELMT/58/FFC-M6

Pos.	Code	Substituted by	Q.ty	Purchasable	Min. Q.ty	Price €	For mainten.	Description
032	5.511.0991		1	Yes	1	29.98		BRUSH PLATE LIFTING AXLE ASSEMBLY
033	3.499.0434		1	Yes	1	30.5		BRUSH MOTOR CABLING FREE BM/BT
034	5.511.1834		1	Yes	1	84.46		BUMPER ASSEMBLY D.50 - SWIFT
035	4.507.1459		1	Yes	1			FIXING PLATE FOR MOTOR SWIFT/FREE
036	4.507.1207		2	Yes	2	11.83		PIN M8
037	4.508.0518		1	Yes	6	2.58		PROTECTION

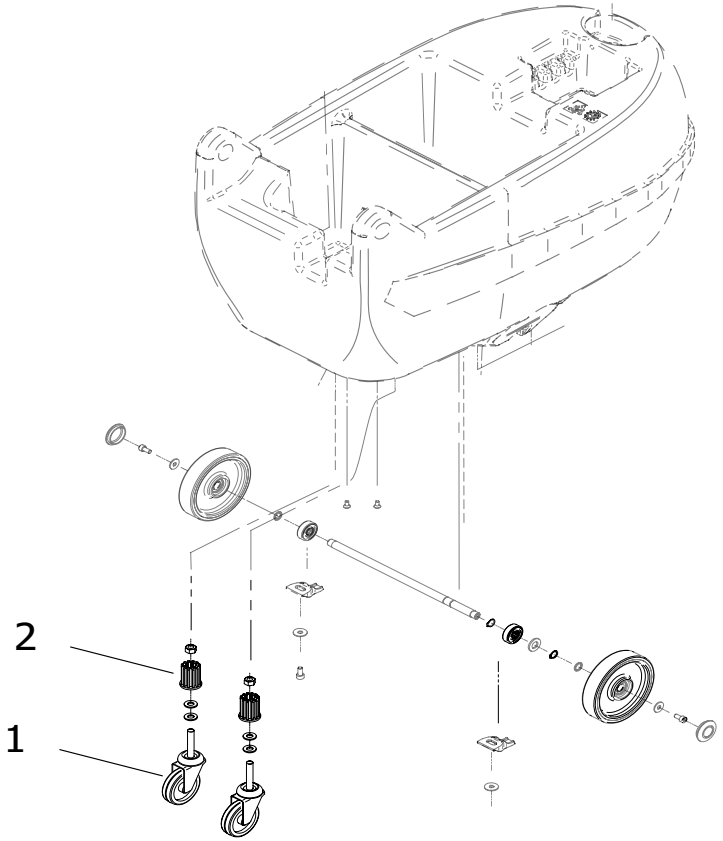
2
1

Pos.	Code	Substituted by	Q.ty	Purchasable	Min. Q.ty	Price €	For mainten.	Description
001	3.006.0128		1	Yes	1	59.82	EXT	REVOLVING WHEEL D.80 OIL-PROOF+SCREW M12X80
002	4.508.0866		1	No		2		WHEEL SUPPORT - SWIF B

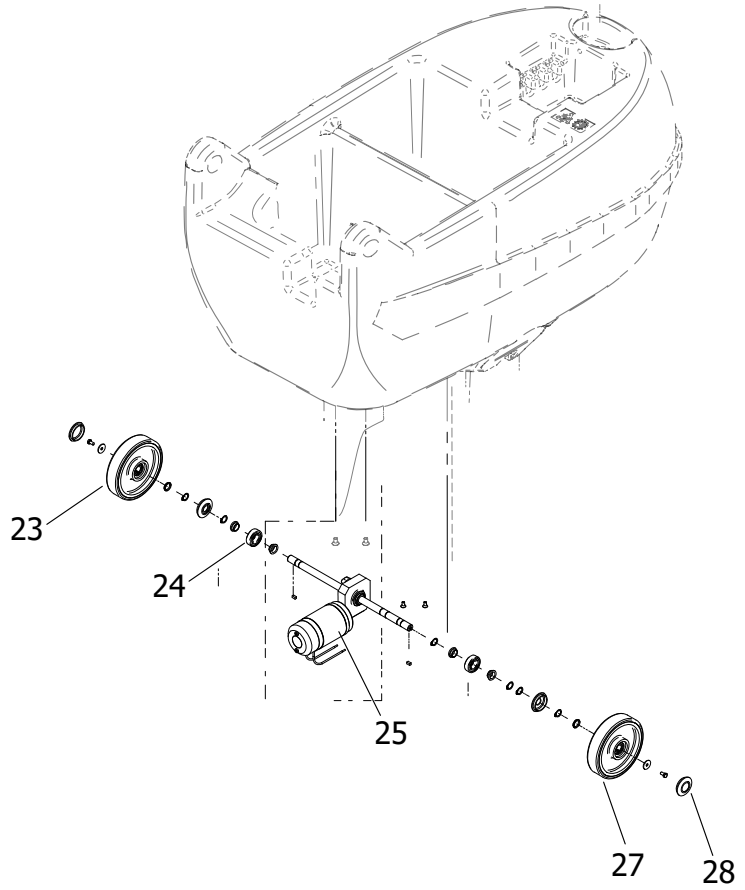
23
24
25
27
28

Pos.	Code	Substituted by	Q.ty	Purchasable	Min. Q.ty	Price €	For mainten.	Description
023	3.006.0117		1	Yes	1	89.35	EXT	WHEEL D.160 HOLE 98 SHA d=17 -LEFT
024	3.001.0034		2	Yes	4	4.18		BALL BEARING 6004 2RS (42X20X12)
025	5.511.1792		1	Yes	1	549.25		GEARMOTOR ASSEMBLY
027	3.006.0118		1	Yes	1	89.35	EXT	WHEEL D.160 HOLE 98 SHA d=17 -RIGHT
028	3.099.1066		2	Yes	2	11.83		CAP FOR WHEEL - GREY

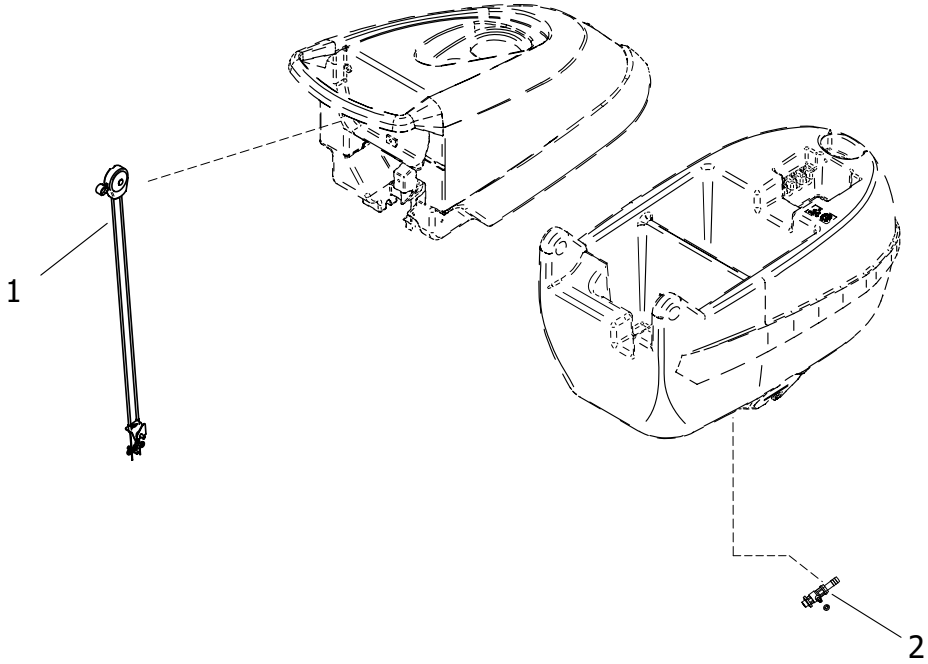
1
2

Pos.	Code	Substituted by	Q.ty	Purchasable	Min. Q.ty	Price €	For mainten.	Description
001	3.099.1249		1	Yes	1	27.18	EXT	COMPLETE CONTROL WATER FREE
002	3.099.0868		1	Yes	1	23.66		BALL VALVE 3/8" F/F WITHOUT HANDLE

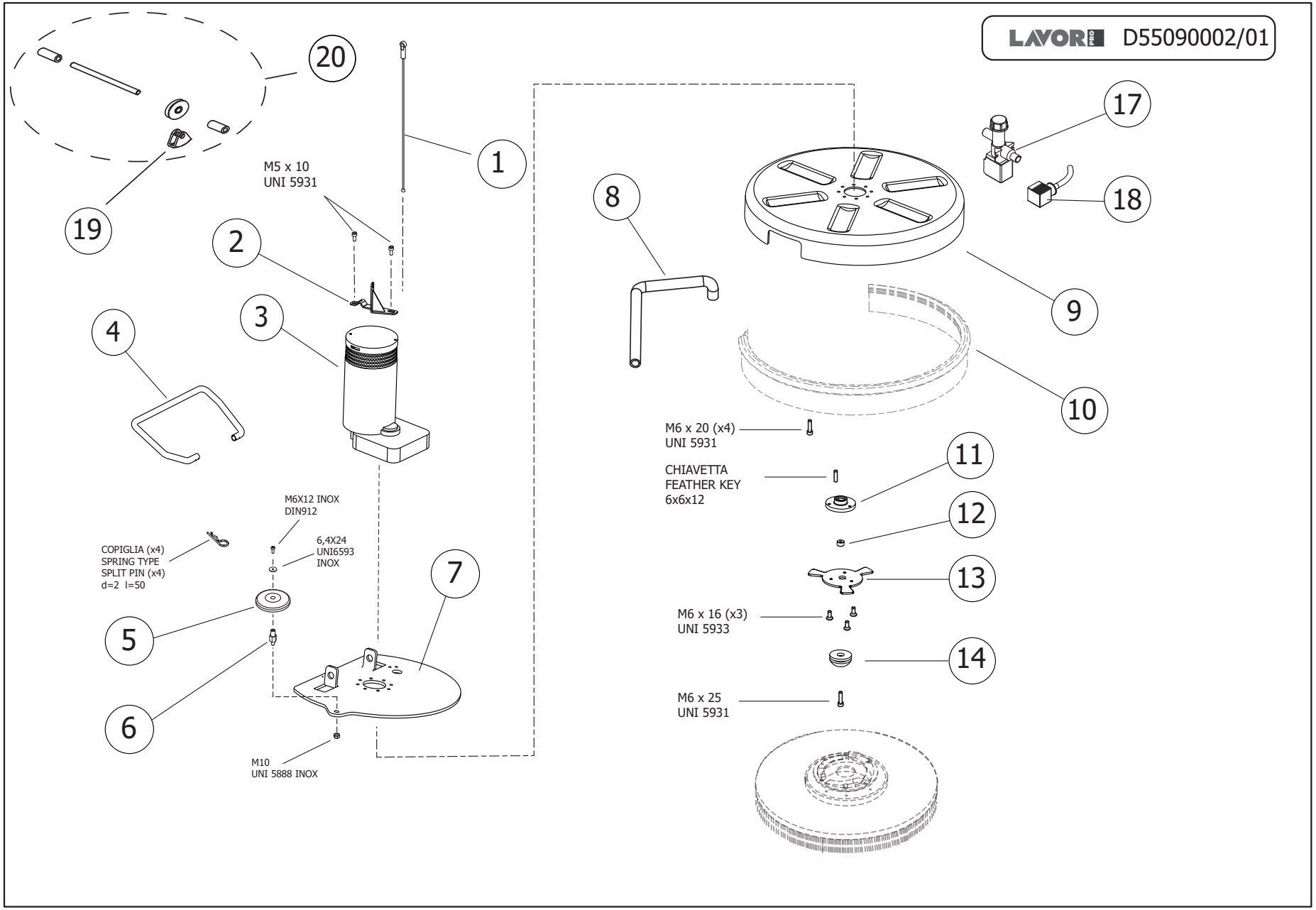
LAVOR PRO D55090002/01
20
19
1
M5 x 10
UNI 5931
2
3
4
8
17
18
9
10
M6 x 20 (x4)
UNI 5931
CHIAVETTA
FEATHER KEY
6x6x12
11
12
13
M6 x 16 (x3)
UNI 5933
14
M6 x 25
UNI 5931
M6X12 INOX
DIN912
6,4X24
UNI6593
INOX
COPIGLIA (x4)
SPRING TYPE
SPLIT PIN (x4)
d=2 l=50
5
6
7
M10
UNI 5888 INOX

Pos.	Code	Substituted by	Q.ty	Purchasable	Min. Q.ty	Price €	For mainten.	Description
001	3.099.1730		1	Yes	1	16.58	EXT	S/S CABLE L=240mm
002	4.507.1482		1	Yes	1	41		BRACKET FOR MOTOR LIFTING CABLE-FREE EVO
003	5.501.0083		1	Yes	1	346.5		MOTOR+GEARBOX 24V DC 550W 150RPM (HY-231)
004	4.608.0106		4	Yes	5	3.06		ANTIEXTRUSION RING
004	4.507.1465		1	Yes	1	31.52		BRUSH PLATE LIFTING BAR - FREEEVO
005	4.508.0224		1	Yes	2	12.41	EXT	BUMPER WHEEL D.110 GREY
006	4.507.0308		1	Yes	3	6.58		SUPPORT FOR BUMPER WHEEL
007	4.507.1463		1	Yes	1	81.6		BRUSH PLATE
008	3.099.0865		1	Yes	1	42.99		HOSE ARMONVILLE D.int.=14 L=580
009	4.508.1543		1	Yes	1	23.18		BRUSH COVER 50CM
011	4.507.1470		1	Yes	1	36.36		BUSHING
012	4.507.1469		1	Yes	6	2.55		BUSHING
013	4.507.0300		1	Yes	1	23.66		BRUSH COUPLING
014	5.511.0867		1	Yes	1	18.5		BRUSH COUPLING ASSEMBLY
017	3.412.0044		1	Yes	1	100.88	EXT	SOLENOID VALVE 24V
018	4.512.0071	5.511.1633	1	Yes	1	15.38		CONNECTOR WITH CABLE
019	4.506.0142		1	Yes	12	1.28		PULLEY FORK
020	5.511.1894		1	Yes	1	40		PULLEY ASSEMBLY FREE

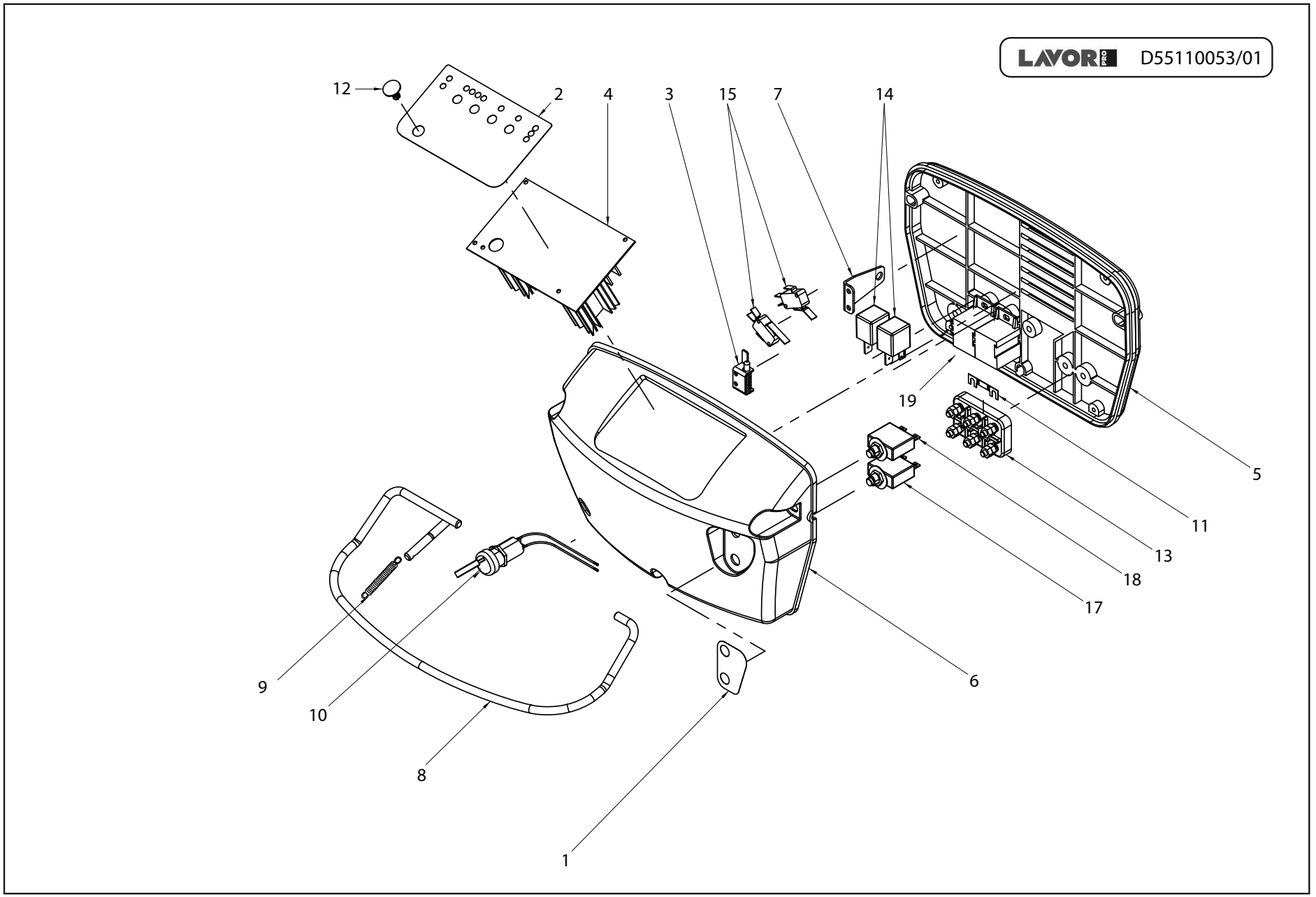
LAVOR PRO
D55110053/01
12
2
4
3
15
7
14
19
5
11
13
18
17
6
9
10
8
1

Pos.	Code	Substituted by	Q.ty	Purchasable	Min. Q.ty	Price €	For mainten.	Description
001	7.503.0086		1	Yes	2	8.11		ADHESIVE LABEL (TRACT.&BRUSH)
002	7.503.0085		1	Yes	2	11.83		ADHESIVE LABEL FOR CONTROLS EASY-R BT TYPE
003	5.509.0556		1	Yes	1	31.3		CONTROL LEVER ASSEMBLY
004	4.515.0001		1	Yes	1	222.77	EXT	CONTROL BOARD 24V
005	4.508.0397		1	Yes	1	24.82		ELECTRIC BOX SUPPORT
006	4.508.0396		1	Yes	1	24.82		ELECTRIC BOX COVER
007	4.507.0659		1	Yes	3	5.51		CLAMP FOR TRACTION LEVER
008	4.507.0706		1	Yes	1	23.66		LEVER
009	4.507.0522		1	Yes	6	2.7		SPRING
010	3.499.0406	5.511.1566	1	Yes	1	34.65		IGNITION KEY FOR ELECTRONIC DASHBOARD CARD
011	3.499.0135		1	Yes	12	1.28	EXT	STRIP FUSE 60A
012	3.099.1529		1	Yes	12	1.28		COVER PLUG D. 20
013	3.405.0045		1	Yes	3	6.78		TERMINAL BOARD MEC584 70-45
014	3.402.0017		2	Yes	1	22.54	EXT	RELAY AUTOMOTIVE CB1AH-24V 70A
015	3.401.0113		2	Yes	2	11.58	EXT	MICROSWITCH SAIA XGO2-88-J24
017	3.401.0075		1	Yes	2	12.65	EXT	THERMAL CIRCUIT BREAKER 35A SM7350
018	3.401.0073		1	Yes	1	17.34	EXT	THERMAL CIRCUIT BREAKER 12A SM7120
019	3.410.0022		2	Yes	1	23.66		RELAY SUPPORT FOR CB1AH

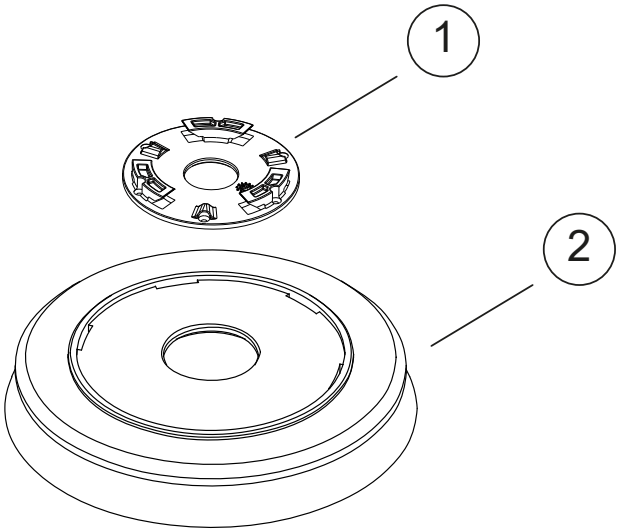
1
2

Pos.	Code	Substituted by	Q.ty	Purchasable	Min. Q.ty	Price €	For mainten.	Description
001	4.508.1192		1	Yes	2	12.41	EXT	UNIFIED FLANGE FOR BRUSH COUPLING
002	3.602.0003	5.511.1097	1	Yes	1	71.65		BRUSH PPL MOD.50 -M102- -L102D.483/19-SPZ0500001-

Code	Parts Table	Pos.	Q.ty
3.001.0034	R55111793	024	2
3.006.0076	R55092079	006	1
3.006.0117	R55111793	023	1
3.006.0118	R55111793	027	1
3.006.0128	R55111474	001	1
3.099.0307	R55092084	031	1
3.099.0343	R55092084	006	1
3.099.0467	R55111795	009	2
3.099.0865	R55092140	008	1
3.099.0868	R55111834	002	1
3.099.0881	R55092084	012	1
3.099.1066	R55111793	028	2
3.099.1189	R55092079	002	1
3.099.1249	R55111834	001	1
3.099.1329	R55092084	011	1
3.099.1529	R55110986	012	1
3.099.1730	R55092140	001	1
3.099.1900	R55111795	008	2
3.102.0026	R85270011	007	1
3.200.0168	R55111795	003	1
3.200.0172	R55111795	006	1
3.401.0073	R55110986	018	1
3.401.0075	R55110986	017	1
3.401.0113	R55110986	015	2
3.402.0017	R55110986	014	2
3.405.0045	R55110986	013	1
3.410.0022	R55110986	019	2
3.412.0044	R55092140	017	1
3.499.0135	R55110986	011	1
3.499.0406	R55110986	010	1
3.499.0434	R55092084	033	1

Code	Parts Table	Pos.	Q.ty
3.602.0003	R55111097	002	1
4.505.0160	R55092084	026	1
4.505.0866	R55111795	001	1
4.506.0142	R55092140	019	1
4.507.0300	R55092140	013	1
4.507.0308	R55092140	006	1
4.507.0522	R55110986	009	1
4.507.0659	R55110986	007	1
4.507.0699	R55092084	020	1
4.507.0700	R55092084	002	1
4.507.0706	R55110986	008	1
4.507.0793	R55092084	028	2
4.507.0854	R55092079	007	1
4.507.1076	R55092079	004	1
4.507.1159	R55092084	025	1
4.507.1207	R55092084	036	2
4.507.1385	R55092079	003	1
4.507.1459	R55092084	035	1
4.507.1463	R55092140	007	1
4.507.1465	R55092140	004	1
4.507.1469	R55092140	012	1
4.507.1470	R55092140	011	1
4.507.1478	R55092079	005	1
4.507.1482	R55092140	002	1
4.508.0224	R55092140	005	1
	R55111795	010	2
4.508.0396	R55110986	006	1
4.508.0397	R55110986	005	1
4.508.0477	R85270011	002	1
4.508.0505	R55111795	004	1
4.508.0518	R55092084	037	1

Code	Parts Table	Pos.	Q.ty
4.508.0689	R55092084	021	2
4.508.0738	R55092084	004	2
4.508.0739	R55092084	030	1
4.508.0780	R85270011	001	1
4.508.0803	R55092084	027	2
4.508.0866	R55111474	002	1
4.508.0971	R55092084	010	2
4.508.1064	R55092084	029	1
4.508.1192	R55111097	001	1
4.508.1543	R55092140	009	1
4.508.1552	R55111795	007	1
4.508.1554	R85270011	005	1
	R85270011	008	1
4.508.1652	R55092084	003	1
4.508.X467	R55111795	005	1
4.508.X468	R55111795	002	1
4.512.0071	R55092140	018	1
4.515.0001	R55110986	004	1
4.608.0106	R55092140	004	4
5.501.0083	R55092140	003	1
5.509.0556	R55110986	003	1
5.509.0629	R55092084	013	1
5.511.0867	R55092140	014	1
5.511.0937	R55092084	018	1
5.511.0991	R55092084	032	1
5.511.1097	R85270011	006	1
5.511.1474	R55092084	019	2
5.511.1655	R55092084	014	1
5.511.1656	R55092084	005	1
5.511.1657	R55092084	001	1
5.511.1792	R55111793	025	1

Code	Parts Table	Pos.	Q.ty
5.511.1793	R55092084	022	1
5.511.1795	R55092079	001	1
5.511.1823	R55111795	011	1
5.511.1834	R55092084	034	1
5.511.1865	R55092084	016	1
5.511.1894	R55092140	020	1
5.513.0132	R55092084	009	1
5.513.0133	R55092084	008	1
5.513.0134	R55092084	007	1
5.513.0299	R55092079	008	1
7.503.0085	R55110986	002	1
7.503.0086	R55110986	001	1